Altotir

Hoist for construction sites

Wire rope included

Altotir hoists are motorised hoists with a steel cable drum. They allow loads to be lifted. The hoist is installed on a swing jib, which in turn is installed on a scaffold tube. The device is operated by a button pendant control box with emergency stop.

Hoist for lifting loads; quick installation on scaffold tube.

- Model capacity 200kg
- Height of Lift 25m
- Speed 25m /min
- Robust device
- Installation on a standard scaffold tube or installation on a hinged slewing jib.
- Precise load positioning within millimetres

Model	WLL	Lifting Height (m)	Wire Rope Diameter (mm)	Product Code
Altotir	200 kg	35 m	5 mm	261579

Options	Code produit
Door / ceiling prop	231757
Window prop	231767

Minifor with plug-in pendant control box

Minifor TR10 - TR30

Minifor TR30S - TR50

Model	WLL (kg)	Forward Speed (m/min)	Voltage (V)	Number of Phases	Power (kW)	Weight (kg)	Product Code
TR10	100	15	230	1 (monophased)	0,37	20	279719
TR30	300	5	230	1 (monophased)	0,37	20	279729
TR30S	300	13	230	1 (monophased)	1,1	32	279739
TR30S	300	13	400	3 (triphased)	1,1	32	279749
TR50	500	7	230	1 (monophased)	1,1	32	279759
TR50	500	7	400	3 (triphased)	1,1	32	279769
TR55	550	7	230	1 (monophased)	1,1	32	286869
TR55	550	7	400	3 (triphased)	1,1	32	286889
TR110	1,100	3,5	230	1 (monophased)	1,1	32	286909

Autres longueurs de BaB en option page 41

Made in France

Minifor with plug-in pendant control box and spring-loaded reeler

Wire included

Model	WLL (kg)	Forward Speed (m/min)	Voltage (V)	Number of Phases	Power (kW)	Weight (kg)	Product Code
TR10 - 20m	100	15	230	1 (monophased)	0,37	38	279599
TR30 - 20m	300	5	230	1 (monophased)	0,37	38	279629
TR10 - 40m	100	15	230	1 (monophased)	0,37	42	279619
TR30 - 40m	300	5	230	1 (monophased)	0,27	42	279649

Made in France

OPTION: choice of a plug-in pendant control box

Model	Length (cm)	Product Code
	4	270487
	5	270497
	6	270507
	7	270517
	8	270527
	9	270537
	10	270547
	11	270557
	12	270567
	13	270577
	14	270587
	15	270597
	16	270607
	17	270617
	18	270627
	19	270637
	20	270647
	25	270657

Control cable extension

Model	Product Code
Control cable extension with Harting plug 10 m	106287
Control cable extension with Harting plug 15 m	112347
Control cable extension with Harting plug 20 m	113197

Minifor with radio control

Minifor TR10 - TR30

Minifor TR30S - TR50

Modèle	CMU (kg)	Vitesse (m/min)	Voltage (V)	Nombre de phases	Puissance (kW)	Poids (kg)	Code produit
TR10	100	15	230	1 (monophased)	0,37	24	42799
TR30	300	5	230	1 (monophased)	0,37	24	42899
TR30S	300	13	230	1 (monophased)	1,1	37	44759
TR30S	300	13	400	3 (triphased)	1,1	33	44789
TR50	500	7	230	1 (monophased)	1,1	37	44879
TR50	500	7	400	3 (triphased)	1,1	34	44919
TR55	550	7	230	1 (monophased)	1,1	32	286879
TR55	550	7	400	3 (triphased)	1,1	32	286899
TR110	1,100	3,5	230	1 (monophased)	1,1	32	286919

Made in France

Minifor with radio control and spring-loaded reeler

Wire included

Modèle	CMU (kg)	Vitesse (m/min)	Voltage (V)	Nombre de phases	Puissance (kW)	Poids (kg)	Code produit
TR10 - 20m	100	15	230	1 (monophased)	0,37	41	279659
TR30 - 20m	300	5	230	1 (monophased)	0,37	41	279689
TR10 - 40m	100	15	230	1 (monophased)	0,37	42	279679
TR30 - 40m	300	5	230	1 (monophased)	0,27	42	279709

Made in France

Minifor

Sheaving kits & accessories

Sheaving kit for Minifor

Model	Product Code
sheaving kit TR10/TR30 with safety hook	217897
sheaving kit TR30S/TR50 with safety hook	217887

Box for Minifor TR

Coffret métallique	Code produit
Box for Minifor with rope (all models) 580x375x355	60665
Box for Minifor TR 10/TR 30	60485
Box for Minifor TR 30S/TR 50	102715

Model	Product Code
Mono electric cable - extension	3341
Tri electric cable - extension	3421

Coil for cable

Model	Product Code
Coil for cable	22107

Minifor

Wire rope

Wire rope 6.5 mm with hook

Model	Product Code
10 m	24719
15 m	61219
20 m	24729
25 m	61229
30 m	24739
35 m	61239
40 m	24749
45 m	61249
50 m	24759
55 m	199699
60 m	24769
65 m	61269
70 m	24779
75 m	61279
80 m	24789

Made in France

Other lengths :

Start Kit + Nb of meters (by multiple of 5 m)

Model	Product Code
Start kit	238437
m.	238567

Made in France

Minifor

Wire rope

Wire rope 6.5mm with rotative hook

Model	Product Code
10 m	193989
15 m	199539
20 m	193999
25 m	199549
30 m	194009
35 m	199559
40 m	194019
45 m	199569
50 m	194029
55 m	199579
60 m	194039
65 m	199589
70 m	199609
75 m	199599
80 m	194049

Made in France

Other lengths :

Start Kit + Nb of meters (by multiple of 5 m)

Model	Product Code
Start Kit	238447
m.	238577

Made in France

Minifor TR125 SY

The Minifor TR125 SY hoist is equipped with a special synthetic rope. It can be used to lift over great heights (standard rope length up to 200 m, longer ropes upon request). The torque is steady and speed is also stable at 30 m/min. The motor integrated brake makes it intrinsically safe in operation. The Minifor TR125 SY hoist is available with different voltages and is suitable for various applications. It is operated through a push button pendant control. As an option, the Minifor TR125 SY hoist can be equipped with a wireless remote control.

TECHNICAL CHARACTERISTICS :

- Special synthetic rope
- Lightweight
- Quick installation
- Unlimited wire rope length
- Easy to use, light-weight, robust, powerful
- Working load can be increased with sheaving kit
- Up and down limit switches
- Strong, robust and versatile (IP55)

Tirak

Traction hoists with limitless pulling length for man riding and material lifting

- Capacity from 300 to 3000 kg
- Compact
- Always profitable
- Diversity of applications
- Robust components
- Low-wear components
- Easy handling

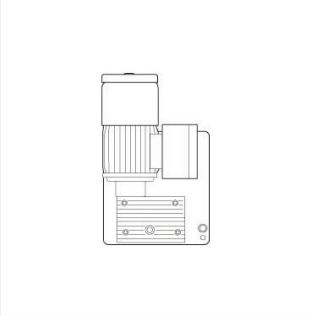

The compact dimensions and low weight enable easy handling and simplify the integration of the Tirak hoist into your own applications, thus increasing productivity and efficiency.
An Increase of load capacity is possible by using reeving pulleys

Tirak application & codification

ANCHORED TO THE FRAME

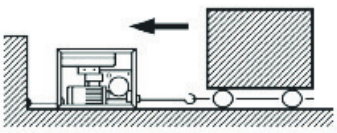

Secure the mobile hoist to a suitable anchor point by using a sling, chain or other securing method and you will be ready to start working.

ORIENTATION

The tirak™ hoist will automatically rotate around its attachment in the direction of the force. Contrary to a drum hoist, the direction of pull is always the same because of the steady wire rope output. In addition, the speed and force are constant.

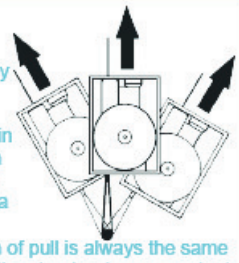

LIFTING LOADS

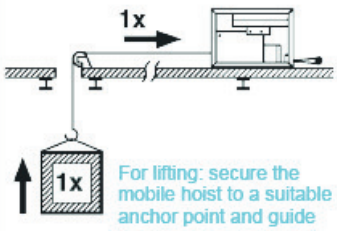

For lifting: secure the mobile hoist to a suitable anchor point and guide the wire rope through 1 or more sheave blocks.

DIRECT LIFTING OR PULLING

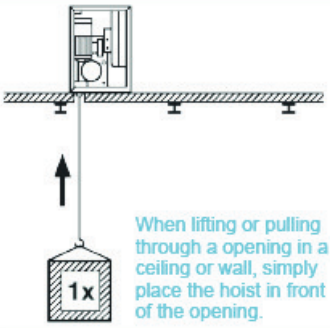

When lifting or pulling through a opening in a ceiling or wall, simply place the hoist in front of the opening.

POSITIONING

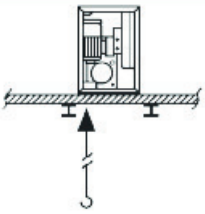

If the opening is not large enough for the hook, first position the hoist and guide the wire rope with the tip through the opening and into the Tirak™.

LIFTING AND REEVING

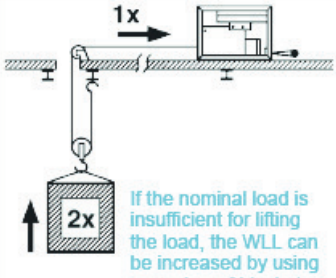

If the nominal load is insufficient for lifting the load, the WLL can be increased by using a number of blocks/ sheaves.

TYPE CODING STRUCTURE, INFINITE POSSIBILITIES

CUSTOMISATION

- Each Tirak is assembled and produced in accordance with customer requirements. We will be happy to advise and support you while assembling the optimal Tirak for your application.
- Type coding structure

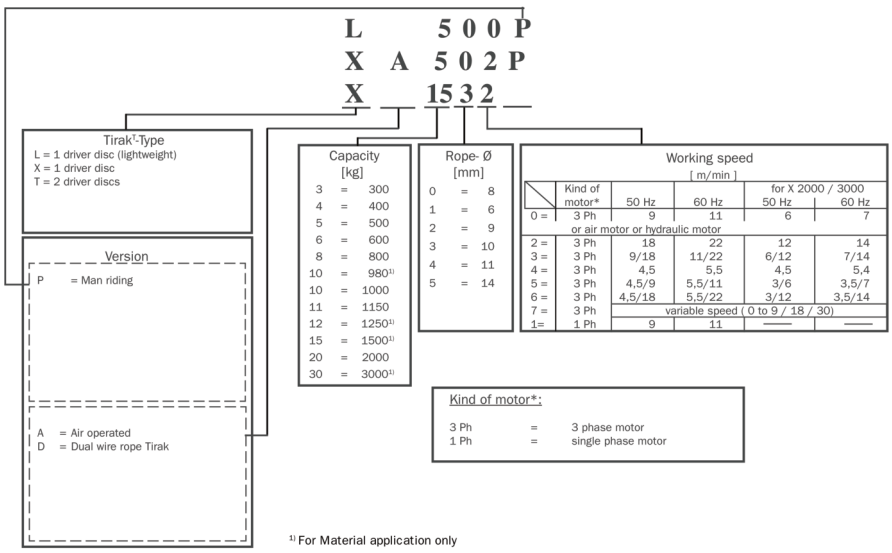

[1)] For Material application only

Tirak Hoist for Material Handling

The Tirak by Tractel is the number one motorised traction hoist worldwide. With its rope pass-through design, the Tirak allows for unlimited rope lengths, providing ultimate flexibility. No matter your application, the Tirak ensures safe and reliable lifting.

The T-series

When your application calls for moving material back and forth, the T-series is the ideal solution. Equipped with two traction sheaves, the T-series is capable of pulling both forwards and backwards with the same force.

The X-series

The X-series is the ideal solution for applications that require lifting in only one direction. Built using a single traction sheave, the X-series allows for easy maneuvering of heavy loads.

No matter the position of the load, the Tirak provides constant lifting speed. When you choose Tirak hoists, you are guaranteed:

- Quality: combining proven technology with state-of-the-art production methods. Robust, powerful and easy to transport, the Tirak provides the ultimate in efficiency and durability, even in harsh working conditions
- Reliability: low cost of ownership thanks to its unique design and the extremely gentle rope drive which extends rope service life
- Safety: multiple levels of safety built into the hoist. All relevant standards and safety regulations are considered during the development and design of the Tiirak.

A complete range of Tirak models offers WLLs from less than 300kg up to 3000kg for material applications.

For more detailed information about the Tirak traction hoist, contact your local Tractel distributor.

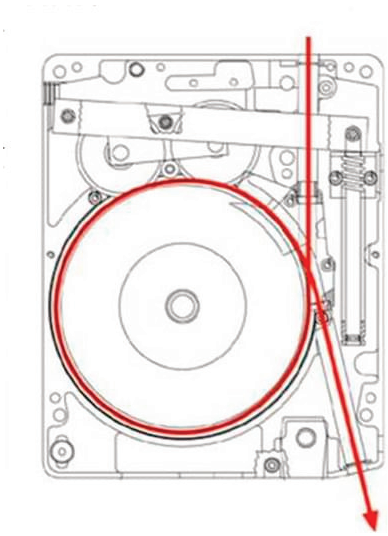

X-Serie

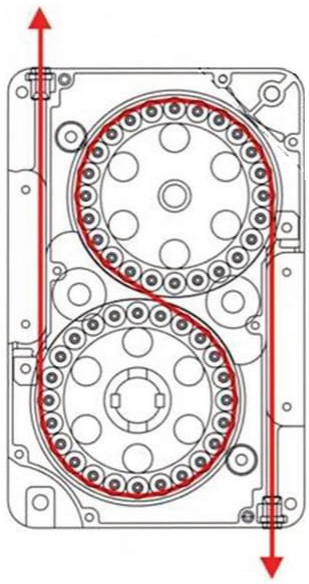

T-Serie

Tralift - Manual chain hoists

The Tralift manual hand chain hoist has a unique Tractel design which is compact, light yet robust, able to tackle the most extreme lifting conditions.
Ideal for rental fleets, industrial and construction application. Tractel also offer Tralift in black format for the entertainment industry.
Certified by TÜV Rheinland to EN13157 for capacities 500kg and above when fitted with Corolim Grade 8 EN818-7 load chain which also offers excellent corrosion protection.

- Corrosion resistant Corolim® load chain with less wear and longer life – EN818-7 compliant
- EN13157 fully compliant TÜV Rheinland certified
- Compact and lightweight
- Robust design with cast steel safety catches
- Easily portable for use anywhere
- Swivel hook with overload indication and robust cast steel safety catches
- Option: Overload protection for safe and secure operation reducing unnecessary damage to the hoist – 0.5t to 20t

Tralift dimensions and key components

1. Load chain
2. Lifting hook
3. Pulley block
4. Low limit stop
5. Suspension hook
6. Safety catch
7. Hand chain

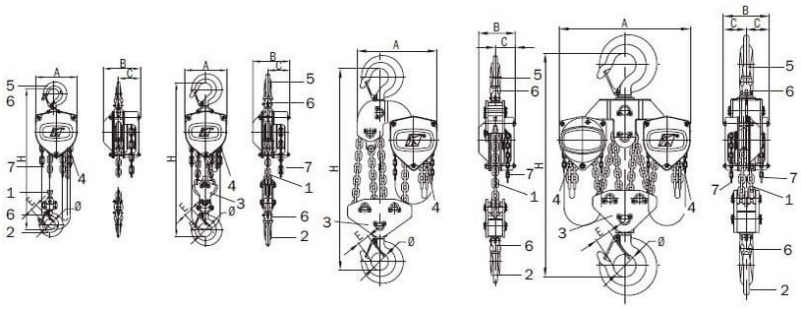

0.5t/1t/1.5t/2t WLL2t/3t/5t WLL 10t WLL 20t

WLL	A	B	C	D	Ø	Hook Distance (mm)	Weight (kg)
0.25	100	110	58	20	28	230	3,7
0.5	132	117.5	70.5	22	35	330	9
1	156	139	83.5	27	40	380	12.4
1.5	178	154	87	29	45	430	16.5
2	196	156.5	89.5	33	50	470	19.6
2	156	139	83.5	33	50	520	17.2
3	178	154	87	39	55	600	24.2
5	229	180	99	44	68	700	42
10	391	180	99	58	85	920	85.1
20	641	224	112	77	110	1060	165.1

En mm.

Tralift without load limiter

www.tuv.com
ID 1419041564

Model	3 m		4 m		5 m		6 m	
	ref.	Code	ref.	Code	ref.	Code	ref.	Code
0,25*	1 fall	75769					1 fall	75779
0,5	1 fall	222239	1 fall	222329	1 fall	222419	1 fall	222509
1	1 fall	222249	1 fall	222339	1 fall	222429	1 fall	222519
1,5	1 fall	222259	1 fall	222349	1 fall	222439	1 fall	222529
2	2 falls	222269	2 falls	222359	2 falls	222449	2 falls	222539
2	1 fall	222279	1 fall	222369	1 fall	222459	1 fall	222549
3	2 falls	222289	2 falls	222379	2 falls	222469	2 falls	222559
5	2 falls	222299	2 falls	222389	2 falls	222479	2 falls	222569
10	4 falls	222309	4 falls	222399	4 falls	222489	4 falls	222579
20	8 falls	222319	8 falls	222409	8 falls	222499	8 falls	222589

* not EN13157

For chain lengths different from the table above:

WLL (t)	Number of Falls	Basic kit: 1 m of chain (lifting and maneuvering)	Additional lifting height	Additional manipulation chain
0.5	1	279229	238227	238347
1	1	279239	238237	238347
1.5	1	279249	239857	238347
2	2	279259	238257	238347
2	1	279269	238247	238347
3	2	279279	238267	238347
5	2	279289	238277	238347
10	4	279299	238287	238347
20	8	279309	238297	238357

Example:
Costing for 10 m of lifting chain and 8 m of operating chain, WLL 3 t.
279229 + (9 x 238267)

Tralift with load limiter

www.tuv.com
ID 1419041564

Model	3 m		4 m		5 m		6 m	
	ref.	Code	ref.	Code	ref.	Code	ref.	Code
0,5	1 fall	222599	1 fall	222689	1 fall	222779	1 fall	222869
1	1 fall	222609	1 fall	222699	1 fall	222789	1 fall	222879
1,5	1 fall	222619	1 fall	222709	1 fall	222799	1 fall	222889
2	2 falls	222629	2 falls	222719	2 falls	222809	2 falls	222899
2	1 fall	222639	1 fall	222729	1 fall	222819	1 fall	222909
3	2 falls	222649	2 falls	222739	2 falls	222829	2 falls	222919
5	2 falls	222659	2 falls	222749	2 falls	222839	2 falls	222929
10	4 falls	222669	4 falls	222759	4 falls	222849	4 falls	222939
20	8 falls	222679	8 falls	222769	8 falls	222859	8 falls	245009

WLL (t)	Number of Falls	Basic kit: 1 m of chain (lifting and maneuvering)	Additional lifting height	Additional manipulation chain
0.5	1	279319	238227	238347
1	1	279329	238237	238347
1.5	1	279339	239857	238347
2	2	279349	238257	238347
2	1	279359	238247	238347
3	2	279369	238267	238347
5	2	279379	238277	238347
10	4	279389	238287	238347
20	8	279399	238297	238357

Example:
Costing for 10 m of lifting chain and 8 m of operating chain, SWL 3 t.
279369 + (9 x 238267) + (7 x 238347)

Options

Chain bags

WLL (kg)	Nb of falls	Chain length (m) 2–5	5–6	6–12	12–18	18–20	20–22	22–30	30–35
500	1		62902	62902	62912	62912	62912	62912	
1000	1		62902	62902	62912	62912	62912	62912	
1500	1		62922	62932	62932	62932	62942		
2000	2		62902	62912	62912				
2000	1		62922	62932	62932	62932	62942		
3000	2		62932	62932	62942	62942			
5000	2		62952	62962					

Bravo lever hoist aluminium version

Bravo AC aluminium lever hoists

The Bravo AC series lever hoist with aluminium casings is lightweight and easily carried in its own bag, complete with belt loop.

- Aluminium casings
- Compact and lightweight
- Robust design equals less down time
- Easily portable for use anywhere
- Swivel hook
- Pull-through feature to quickly adjust the load chain
- Carry bag with belt loop
- Option: chain locking and shortening device for greater safety ensuring the load or tension is never lost

Model	WLL	Lifting Height (m)	Pressure (N)	Load Chain (mm)	Weight (kg)	Product Code
Bravo AC 250 kg	0.25	1,5	170	4 x 12	2.3	251129
Bravo AC 250 kg	0.25	3	170	4 x 12	2.8	251139
Bravo AC 500 kg	0.5	1,5	190	5 x 15	3.3	251149
Bravo AC 500 kg	0.5	3	190	5 x 15	4.1	251159

Bravo AC lever hoists dimension & key components

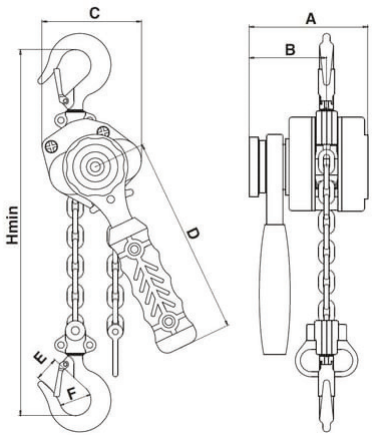

WLL	A	B	C	D	E	Ø	Hook Distance (mm)	Max effort of the handle (daN)
0.25	100	61	80	160	23	32	230	17
0.5	110	68	100	160	25	34	270	19

All dimensions in mm.

Bravo without load limiter

Machine Directive 2006/42/CE EN13157 - A1:2009 conformity

bravo™ lever hoists from Tractel® are particularly suitable for tensioning, lifting, handling and traction operations, with optimum safety thanks to exclusive desynchronised pawls preventing any unintentional release of the load.

- Permanent load control
- Automatic load brake closure
- Optimised safety against unintentional release of the load thanks to the two independent desynchronised pawls
- Free wheel system / neutral position: fast and easy pull through of the load chain
- Wide range: capacities from 250 kg to 9 t
- Roller and block chain guides ensuring a smooth chain action through the hoist
- Galvanised fittings, epoxy paint for much greater resistance to aggressive environments
- Forged steel hooks with 360° rotation and overload opening indicators
- Compact with a light weight simplifies use and transport
- Rubber handle improves grip

WLL (t)	1,5 m		3 m		4,5 m		6 m	
	Nb of falls	Code	Nb of falls	Code	Nb of falls	Code	Nb of falls	Code
0,25	1	75749					1	75759
0,5	1	199379	1	199389	1	199399	1	199419
0,75	1	199009	1	199069	1	199129	1	199189
1	1	199029	1	199089	1	199149	1	199209
1,5	1	199039	1	199099	1	199159	1	199219
3	2	199049	2	199109	2	199169	2	199229
6	3	261189	3	261199	3	261209	3	261219

For chain lengths different from the table above:

WLL (t)	Nb of falls	Code	Additional lifting height (m of chain)	Option Chain Locking Device CLD integrated on the chain hoist*
0.5	1	279099	238177	196898
0.75	1	279109	238187	196908
1.5	1	279129	238187	196908
3	2	279139	238197	196918
6	2	279149	238207	196928
9	2	279159	238217	196928

Example (non-standard lift height) : *Exemple (CLD mounted on hoist) :
10m of chain, WLL 3 t. 3 m of chain, WLL 3 t, option CLD mounted.
279139 + (9 x 238207) 279139 + (2 x 238207) + 196898

Bravo with load limiter

bravo™ lever hoists from Tractel® are particularly suitable for tensioning, lifting, handling and traction operations, with optimum safety thanks to exclusive desynchronised pawls preventing any unintentional release of the load.

- Permanent load control
- Automatic load brake closure
- Optimised safety against unintentional release of the load thanks to the two independent desynchronised pawls
- Free wheel system / neutral position: fast and easy pull through of the load chain
- Wide range: capacities from 750 kg to 9 t
- Roller and block chain guides ensuring a smooth chain action through the hoist
- Galvanised fittings, epoxy paint for much greater resistance to aggressive environments
- Forged steel hooks with 360° rotation and overload opening indicators
- Compact with a light weight simplifies use and transport
- Rubber handle improves grip
- Compliance with Machine Directive 2006/42/CE
- EN13157 + A1:2009 conformity

WLL (t)	1,5 m		3 m		4,5 m		6 m	
	Nb of falls	Code	Nb of falls	Code	Nb of falls	Code	Nb of falls	Code
0,75	1	200939	1	210009	1	210079	1	210149
1	1	200959	1	210029	1	210099	1	210169
1,5	1	200969	1	210039	1	210109	1	210179
3	2	200979	2	210049	2	210119	2	210189
6	3	261269	3	261279	3	261289	3	261299

For chain lengths different from the table above:

WLL (t)	Nb of falls	Code	Additional lifting height (m of chain)	Option Chain Locking Device CLD integrated on the chain hoist*
0.75	1	279169	238187	196908
1.5	2	279189	238187	196908
3	1	279199	238197	196918
6	2	279209	238207	196928
9	2	279219	238217	196928

Example (non-standard lift height): * Example (CLD mounted on hoist):
10 m of chain, WLL 3 t 3 m of chain, CMU 3 t, option CLD mounted.
279199 + (9 x 238207) 279139 + (2 x 238207) / 196898

Chain Locking Device - CLD

The CLD chain locking device acts as an adjustable limit on the Bravo & Tralift lever hoist when lowering the load.
The chain locking device can be used with Bravo lever hoists for load lifting, load pulling and rope tensioning applications.

The chain locking device is intended to be a retrofitted accessory to adapt all models and capacities of Bravo & Tralift hoists supplied by Tractel in compliance with the size of the chain.
The CLD acts as a chain end stop, which can be adjusted to any position on the free side of the load chain.

Modèle	CMU du palan associé (kg)
250 kg and 500 kg	196438
750 kg and 1 ton	196448
1.5 ton	196458
3.6 ton and 9 ton	196468

Possibility of mounting the CLDs on the hoists in the factory.

Range of Electric Chain Hoists

volt trac™

- **WLL ranging from 125 to 2000 kg**
- Warranty 18 months
- Designed for frequent use
- Fit for challenging environments: IP 55
- Extra low noise level
- Galvanized load lifting chain

tralift™ TT

- **WLL ranging from 250 to 2000 kg**
- Warranty 3 years
- Designed for frequent use
- Fit for challenging environments : IP 65
- Low noise level: 65dB
- Stainless steel models available
- Special high performance load lifting chain
- Low headroom

Volt trac

Range of electric chain hoists - 250 to 2 000 kg

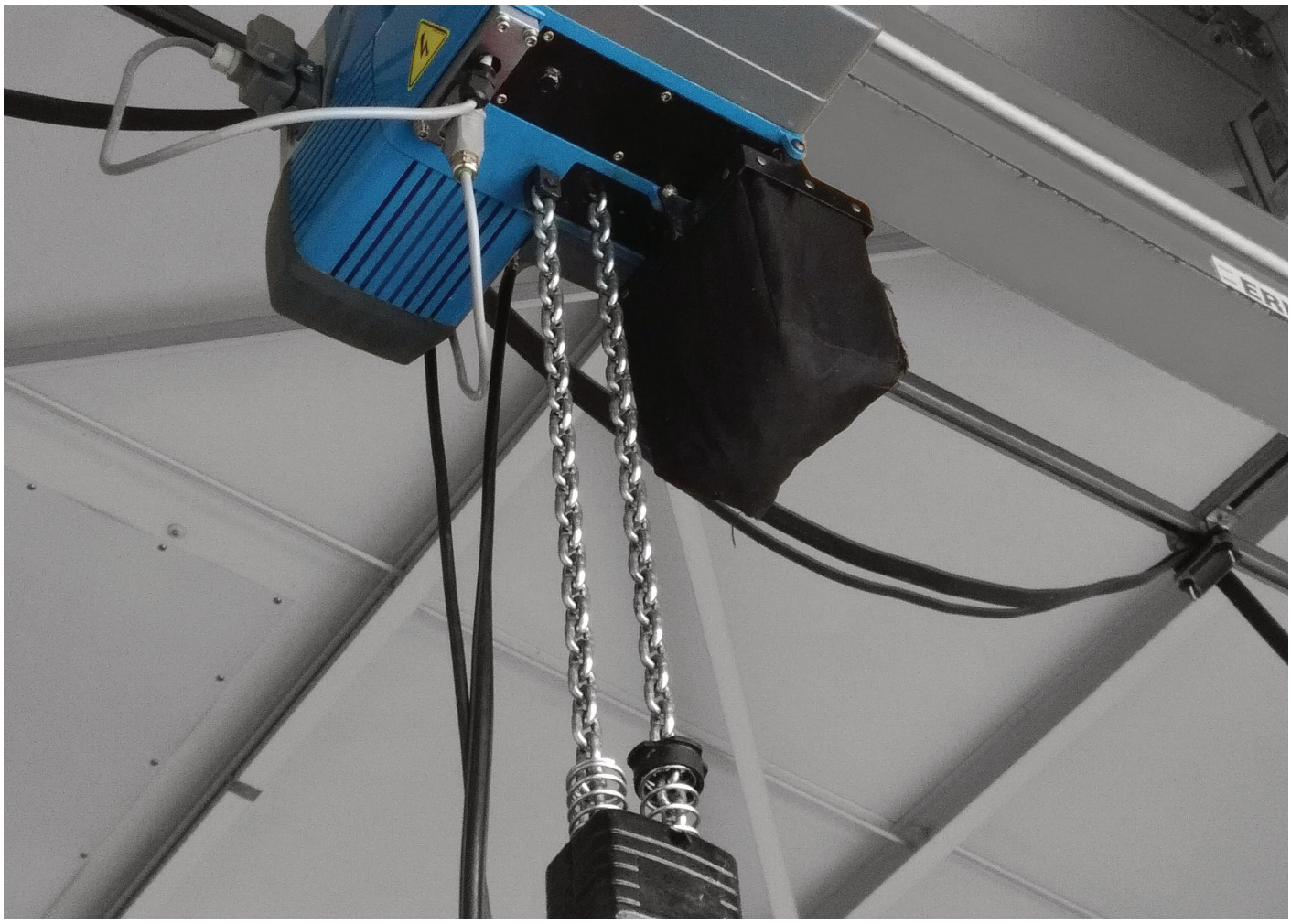

Volt trac

Range of electric chain hoists - 250 to 2 000 kg

Customize your Volt trac hoist starting from the starter kit.

Add the desired options to get the Volt trac hoist that matches your project.

Lifting height 3 m / Pendant control box 1,80 m					Options								
WLL (kg)	Nb of falls	Nb of speeds	Lifting speed (m/min)	Code	Additional lifting height		Pendant conntrol box : additional meter		e-trolley 1 speed 10 m/min	e-trolley 2 speeds 19-6 m/min	e-trolley 2 speeds 9-3 m/min	Additional meter pendant control box Hoist + e trolley	
					Add m	Lg Max	Add m	Lg Max				Add meter	Lg Max
250	1	1	10	280209	270917	25 m	195127	25 m	276257	276317	276517	239597	25 m
500	2	1	5	280219	270927	25 m	195127	25 m	276267	276327	276527	239597	25 m
500	1	1	8	280229	270937	25 m	195127	25 m	276277	276337	276537	239597	25 m
500	1	2	8/2	280239	270937	25 m	195127	25 m	276417	276477	276577	239597	25 m
1,000	2	1	4	280249	270947	25 m	195127	25 m	276287	276347	276547	239597	25 m
1,000	2	2	4/1	280259	270947	25 m	195127	25 m	276427	276487	276587	239597	25 m
1,000	1	1	8	280269	270957	25 m	195127	25 m	276297	276457	276557	239597	25 m
1,000	1	2	8/2	280279	270957	25 m	195127	25 m	276437	276497	276597	239597	25 m
2,000	2	1	4	280289	270967	25 m	195127	25 m	276307	276467	276567	239597	25 m
2,000	2	2	4/1	280299	270967	25 m	195127	25 m	276447	276507	276607	239597	25 m

Model	Product Code
250 kg - 1000 kg, 68 - 320 mm	108937
2000 kg 76 - 320 mm	108947

Chain bags

WLL (kg)	Nb of falls	1 2 3 4 5 6 7 8 9 10 12 13 15 18 20 25 30 40
250	1	276617
500	2	276617 276627 276637
500	1	276647
1000	2	276647 276657 276667
1000	1	276677 276687
2000	2	276677 276697 276707

Volt trac

Options

Eye suspension for Volt trac

Model	Product Code
250 kg, 1fall	270987
500kg, 2 falls	270997
500 kg, 1 fall	274007
1000kg, 2falls	274017
1000 kg, 1 fall	274027
2000 kg, 2 falls	274037

Trolley limit switch

Model	Product Code
trolley limit switch	75257

Radio remote control

Model	Product Code
250 kg 1 fall	274047
500 kg 1 fall	274057
1000 kg 1 fall	274067
500 kg 2 falls	276717
1000 kg 2 falls	276727
250 kg 1 fall & trolley 1 fall	274087
500 kg 1 fall & trolley 1 fall	274097
1000 kg 1 fall & trolley 1 fall	274107
500 kg 2 falls & trolley 1 fall	276737
1000 kg 2 falls & trolley 1 fall	276747
250 kg 1 fall & trolley 2 falls	276757
500 kg 1 fall & trolley 2 falls	276767
1000 kg 1 fall & trolley 2 falls	276777
500 kg 2 falls & trolley 2 falls	276787
1000 kg 2 falls & trolley 2 falls	276797

Tralift TT

Range of electric chain hoists - 250 to 6 300 kg.

Designed for permanent installation on a jib crane, underneath an overhead crane, or on motorised or non-motorised trolleys.

- Suitable for the toughest applications and conditions
- Recommended for dusty and humid environments and also for outdoor use
- Extra long service life thanks to the permanently lubricated gearbox and the profiled steel
- chain with manganese phosphate coating
- Application range: -15 to +50°C
- Low weight and overhead height due to the compact housing
- Reinforced load hook with forged safety catch
- Alternating current (230V / 1Ph / 50Hz) or three-phase current (400V / 3Ph / 50Hz)
- Ergonomic remote control, wired or wireless
- Corrosion resistant finish

Tralift TT

Range of electric chain hoists from 250 to 6 300 kg.

Customize your Tralift TT starting from the starter kit.

Add the desired options to get the Tralift TT hoist that matches your project.

Hook included

Starter pack : Lifting height 3 m / Pendant conntrol box 1,80 m					Options			
					Additional lifting height		Pendant conntrol box : additional meter	
WLL (kg)	Nb of falls	Nb of speeds	Lifting speed (m/min)	Code	Additional meter	Maximum Length	Additional meter	Maximum Length
250	1	2	8/2	278139	232507	240 m	195127	239 m
500	2	2	4/1	278179	232517	120 m	195127	119 m
500	1	2	8/2	278159	232527	120 m	195127	119 m
1,000	2	2	4/1	278219	232647	60 m	195127	59 m
1,000	1	2	8/2	278199	232637	55 m	195127	54 m
1,600	2	2	4/1	278239	239547	25 m	195127	24 m
1,600	1	2	8/2	293049	281137	35 m	195127	34 m
2,000	2	2	4/1	278259	239547	15 m	195127	14 m
2,000	1	2	8/2	293719	281157	15 m	195127	14 m
2,500	1	2	8/2	293089	281157	7 m	195127	6 m
3,200	2	2	4/1	293069	281147	28 m	195127	27 m
3,200	1	2	6,4/1,6	293099	281157	28 m	195127	27 m
5,000	2	2	4/1	293129	281167	14 m	195127	13 m
6,300	2	2	3,2/0,8	293139	281167	14 m	195127	13 m

Tralift TT - special models

Tralift TT ATEX

To be used in EX proof site (ATEX).

Tralift TTHK

Handy chain model for fast and easy handling of loads

- Control of electric chain hoist and guidance of the load with one hand
- Control unit with rocker switch for left- and right-handed operation
- Hook end positions adjustable by geared limit switch
- Can be combind with slewing or suspended cranes

Option: handy kit for retrofitting of standard electric chain hoist

Option: with frequency inverter

Tralift TTS

Synchronized electric chain hoists for handling of large and bulky loads:

- Precise parallel run of two hooks without twisting the load
- With temperature monitoring
- Hook position individually adjustable by geared limit switch
- Distance between load hooks 0.7-5.0 m
- Perfect to combine with suspended crane or travelling crane

Option: with trolleys

Option: with frequency inverter

Tralift TTW

Electric chain hoist for wind turbines:

- Lifting speed up to 16 m/min
- Lifting height up to 200 m
- Temperature monitoring with shutdown function of the motor in case of overheating
- Automatic switching from high to low lifting speed shortly before the stroke end by geared limit switch
- External limit switches for hook end positions
- Tempered special chain
- Load hook with protective cover

Option: with manual or motorised trolley
Option: chain container

Power Line Systems

Flat cable conducter systems

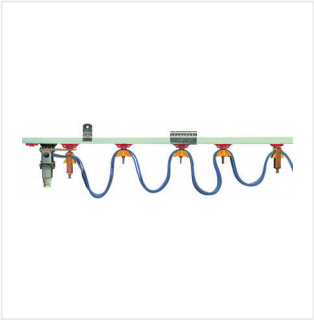

- Galvanized track rail length 2 m, with connectors
- Rail brackets to be clamped
- Cable trolleys, tow trolley
- Cable-fixed end stops
- Terminal box
- Flat cable with cable glands

Model	Product Code
4 m	38018
5 m	38028
6 m	38038
7 m	38048
8 m	38058
9 m	38068
10 m	38078
11 m	38088
12 m	38098
13 m	38108
14 m	38118
15 m	38128
16 m	38138
17 m	38148
18 m	38158
19 m	38168
20 m	38178

Bus bar conductor system

- PVC section element
- Terminal box
- Covering flange
- Collector trolley with leading arm
- End cap
- Fixing brackets

Tralift TR

Pneumatic chain hoist

- Adjustable lifting speed
- End limit switch
- Compact
- Low headroom
- Disc brake
- Operated pressure: 6,3 bars
- Noise level less than 83 dBA to 1 m

Standard:

- 3 m lift - 2 m control cable
- Control by pendant rope or pendant box with button and emergency
- Galvanised lifting chain according to DIN 818-7
- Overload integrated device 1 fall
- Complete range up to W.L.L. 75 t
- Chain box
- To be used un EX proof site (ATEX). For other zones : confirm classification

- Pneumatic traversing trolley : on request

Consult us

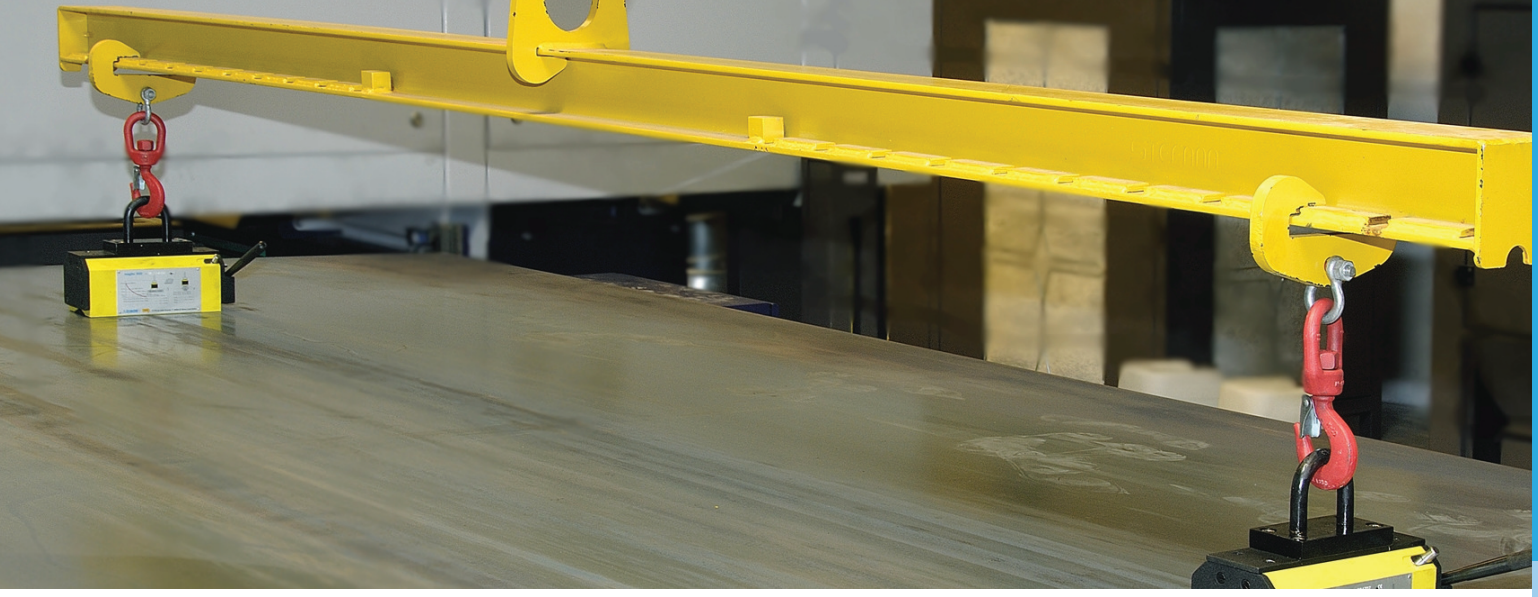

TOPAL

TOPAL RANGE

Tractel offers a complete range of lifting accessories (clamps, beams, etc.) to facilitate safe lifting and movement of materials.

STANDARD PRODUCTS

All standard products exceed the highest safety requirements and are designed from a user's point of view: versatile, robust, simple and suitable for use in building, industry, maritime, on-shore, off-shore, etc. All products are available from stock.

SPECIAL SOLUTIONS

The specialists from the Solutions department design, produce and test a wide variety of special products with a capacity up to 500 t and beyond, in accordance with customer requirements. Special products are: Crane blocks, Rotablocks, lifting beams, wire rope blocks, C-hooks, directional blocks, sheaves, swivels, etc.

All our products are CE & UKCA conform.
They are all delivered with instruction manual + CE/UKCA certificate

TOPAL special designs

Tractel Solutions SAS manufactures on request a wide range of lifting clamps, either derivated standard clamps or designed for a special application.
From a simple polyurethane coating on an existing clamp up to a completely new design.

If you have any special needs, please contact us:

Tractel Solutions S.A.S.

Phone: +33 4 78 50 18 18

Email: info.tractelsolutions@tractel.com

Construction clamps

BX Kerbstone Clamps

- Easy to transport
- Easy to handle
- Great adherence without marking the load.
- Minimised damage risk

Model	WLL	Jaw Opening (mm)	Weight (kg)	Product Code
BX12 1000	120	1 000	9	54008
BX01D 1000	100	1 000	13	50018
BX02 120-130	200	120-300	10	50028
BX200	200	1 000	13	54788

Made in France

SCX-CX Lifting Beam For Conical Pipe Sections

- Lifting &laying of cone-shaped concrete manholes
- CX model ensures contact on 2 points on the load
- SCX model ensures contact on 3 points on the load
- Hot epoxy coating
- Safety factor: 3 (EN 13155.2003 norm)

Model	Description	WLL	Max. Opening (mm)	Weight (kg)	Product Code
CX1	Lifting beam	1,000	650	10	52628
SCX1	Lifting beam	1,000	650	20	50788
SCXE	Chain 2-jump for SCX1 - L=490 mm	1,000	-	2	52618

CX1

SCX

Made in France

RB Lifting Clamp For Concrete Pipe Sections or Manholes

- Hooks for lifting circular or rectangular concrete manholes
- Manufactured without load bearing welds
- Hot epoxy coating
- Safety factor: 3 (EN 13155.2003 norm)

Model	Description	WLL	Jaw Opening (mm)	Weight (kg)	Product Code
RB1.5 40-110	Lifting clamp	500	40-110	9	50728
RBE 1500	Chain 3-hooks, l=1,500 mm for 3 RB clamps	1,500	-	4.9	50738
RBE 1	2-Leg sling RB1.5 HOOKS	1,000	-	2.7	52468
RB1.5 E-3	-	1,500	-	31	54068
RB1.5 E-2	-	1,000	-	21	54078